[CONTRIBUTION FROM THE CHEMICAL LABORATORIES OF IOWA STATE COLLEGE AND FORDHAM UNIVERSITY]

The Degradation of *l*-Arabinal to *l*-Erythrose[1]

BY GEORGE E. FELTON AND WERNER FREUDENBERG

In a previous paper[2] it was shown that *d*-xylal by means of ozone could be degraded to a tetrose, which was identified as *d*-threose. Ozone apparently had a dualistic action. Firstly, it was added to the double bond, forming an unstable ozonide, which in turn was broken down under the influence of the solvent, acetic acid, to two aldehyde groups. Secondly, cleavage of the 1,5-oxygen ring took place, a fact which had to be assumed since a free tetrose and not its 4-formyl derivative was found as the reaction product.

In this present communication we report a further investigation of the reaction, using *l*-arabinal, III, as a starting material. It could be shown that ozonization of arabinal yields *l*-erythrose. As a by-product, however, 4-formylaldehydoerythrose, VI, appeared which was isolated and identified as its dimethylacetal. Additional proof of the presence of a formyl group in VI was contributed by distilling erythrose sirups in a phosphoric acid medium; the distillate then contained formic acid which was titrated with standard alkali.[3]

Diacetylarabinal also could be degraded by ozonization; the expected 2,3-diacetyl-*l*-erythrose, however, was not obtained in a pure state.

In order to secure pure erythrose, therefore, it was necessary to prepare a derivative which could be purified easily and then hydrolyzed to the free sugar. Such a derivative was found in 2,3-monoacetone methylerythroside, VII, a colorless oil having a well defined boiling point and a specific rotation of +58°. On acid hydrolysis this compound yielded *l*-erythrose.

Although it was impossible to induce crystallization, the sirup showed all the characteristics reported for the tetrose. It reduced Fehling's solution even in the cold and reacted slowly with fuchsin sulfurous acid; the erythrosazone with the melting point of 160–63° was easily obtained. *l*-Erythrose in aqueous solution showed mutarotation, equilibrium being reached after two days at +30.5°.

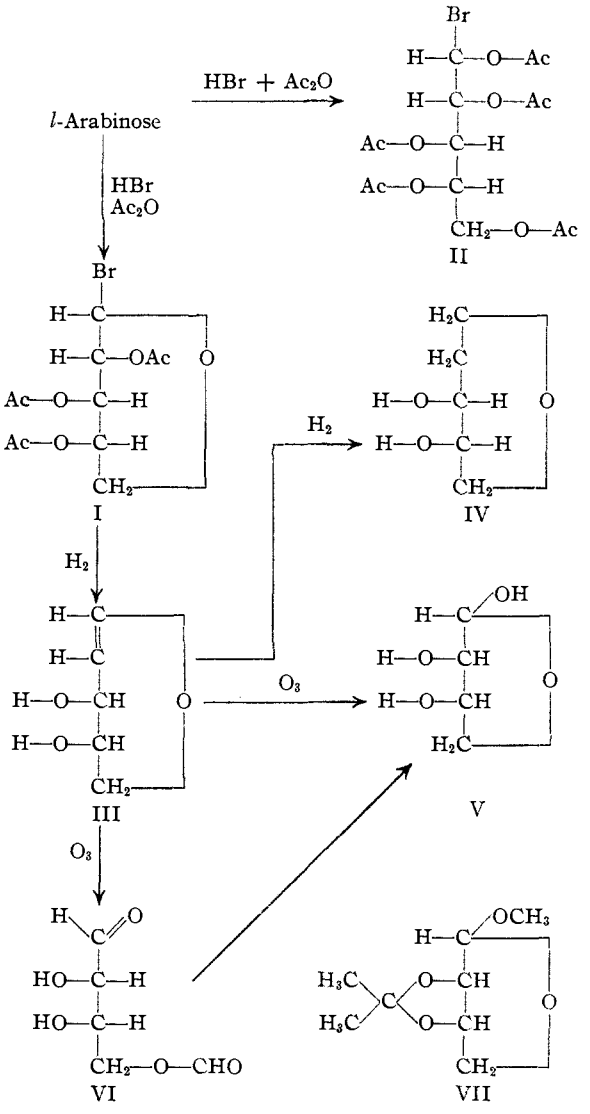

This value disagrees with those obtained using other methods of degradation. Wohl[4] calculated +32.7°; Ruff[5] found +21.5° and −14.8° for the levorotatory *d*-erythrose.[6] A higher rotation, namely, +23.6°, was observed by Weerman,[7] which agrees closely with Deulofeu's value[8] of +22.1°.

(1) Part of a thesis submitted by G. E. Felton in partial fulfilment of the requirements for the degree of Doctor of Philosophy, Iowa State College. We wish to acknowledge our indebtedness to Prof. R. M. Hixon for his interest and helpful suggestions, to Rev. F. W. Power, S.J., for some of the microdeterminations. The investigation has been aided by a grant from the Rockefeller Foundation to Iowa State College.

(2) W. Freudenberg, *Ber.*, **65**, 168 (1932).

(3) Evans and Hass, THIS JOURNAL, **48**, 2703 (1926).

(4) Wohl, *Ber.*, **32**, 3667 (1899).

(5) Ruff, *ibid.*, **34**, 1365 (1901).

(6) Ruff, *ibid.*, **32**, 3672 (1899).

(7) Weerman, *Rec. trav. chim.*, **37**, 15 (1917).

(8) Deulofeu, *J. Chem. Soc.*, 2973 (1932).

A final decision as to the proper rotation for erythrose cannot be reached until the compound can be obtained in a crystalline state.

A preparation of *l*-erythrose when tested with active yeast extract was found to be non-fermentable.

We have studied the action of dry methyl alcohol, containing 0.75% of hydrogen chloride, upon erythrose sirups obtained by ozonization of *l*-arabinal. Two products were identified, a dimethylacetal of 4-formyl*aldehydo*erythrose and a methyl 2-desoxypentoside, the latter being crystalline, with a melting point of 81–82° and a specific rotation of +218.5° in aqueous solution.

The yields of β-acetobromoarabinose, prepared by a slight modification of the directions of Meisenheimer and Jung,[9] could be increased by from 5–10% over those previously reported. Details are given in the experimental part. A new acetobromoarabinose could be isolated from the mother liquors of β-acetobromoarabinose, I. It melted at 132° and had a specific rotation of −131.7°. The expected[10] α-acetobromoarabinose should have a specific rotation of approximately −110°, according to Hudson's calculations. The analyses of the compound, however, revealed a pentaacetylbromoarabinose. On deacetylation and treatment with benzylphenylhydrazine, arabinobenzylphenylhydrazone was obtained, identified by its melting point of 173–174°. Formula II, therefore, is suggested for the new acetobromoarabinose.

From *l*-arabinal we obtained on catalytic hydrogenation *l*-hydroarabinal, IV; its preparation and properties are given in the experimental part.

Experimental Part

l-Arabinose.—This sugar was prepared from mesquite gum by the procedure of Anderson and Sands.[11] A product recrystallized from acetic acid was sufficiently pure for the next step.

β-Acetobromoarabinose.—Since much larger quantities of arabinose were needed the directions of Meisenheimer and Jung[9] had to be modified slightly. One hundred grams of *l*-arabinose was suspended in 500 cc. of acetic anhydride and saturated at 0° with dry hydrogen bromide. The mixture was then allowed to stand at room temperature for twelve hours. Incipient crystallization during this period usually indicated a good yield. The acetic anhydride solution was worked up by diluting with 1500 cc. of ice water. The chloroform layers were combined, dried over calcium chloride, filtered and the solvent evaporated *in vacuo*. The residue was taken up in ether and placed in the ice box for at least twelve hours in order to complete separation. After filtration the crystals were washed with ice cold ether. They melted at 139° and showed a rotation of +288.3° in chloroform. The average yield was 90 g., which was about 40% of the theoretical.

Pentaacetylbromoarabinose.—After complete separation of the β-acetobromoarabinose, the ether was evaporated from the mother liquors. A crystalline bromine-containing substance was obtained which could be recrystallized from ether, melting at 132°. The yields varied upward to 5 g. from each 100 g. of arabinose. The rotations in chloroform of four different samples are listed in Table I.

TABLE I

ROTATION OF PENTAACETYLBROMOARABINOSE (l = 1.1 DCM.; v = 9.98 CC.)

Sample, g.	0.1089	0.2898	0.1623	0.2416
Temp., °C.	31	28	23	23
α	−1.55	−4.22	−2.34	−3.59
$[\alpha]_D$	−129.1	−132.1	−130.9	−134.8

Anal. Calcd. for $C_{15}H_{21}O_{10}Br$:[12] Br, 18.12; C, 40.81; H, 4.79. Found: Br, 18.25, 18.22, 18.03; C, 40.01; H, 4.61.

Diacetylarabinal.—The diacetylarabinal was prepared according to the procedure of Levene and Mori[13] for the corresponding xylose derivative. The yield from 90 g. of acetobromoarabinose averaged 34 g., if a few drops of chloroplatinic acid were used as a catalyst.[14]

Arabinal.—The free arabinal, prepared according to Meisenheimer and Jung,[9] melted at 81–82° and had a rotation of $[\alpha]^{22}_D$ −199.5°.

Dihydroarabinal.—Two grams of arabinal was reduced in an alcohol solution using palladium black as a catalyst. Within one hour most of the compound was hydrogenated, 485 cc. of hydrogen (uncorr.) having been used (calcd. 390 cc.). The solvent was removed *in vacuo*. The remaining sirup could be purified by distillation. The boiling point was found to be 83–85° (1 mm.). Dihydroarabinal was soluble in alcohol, water and benzene, only slightly soluble in ether. For analysis, the compound was dried over phosphoric anhydride in a vacuum desiccator. It had a refractive index of n^{27}_D 1.4848, and a specific rotation of +48.2° in water.

Anal. Calcd. for $C_5H_{10}O_3$: C, 50.85; H, 8.53. Found: C, 50.65, 50.01; H, 8.40, 8.40.

Ozonization of Diacetylarabinal.—Five grams of the substance was dissolved in 50 cc. of glacial acetic acid and a stream of oxygen containing ozone was passed through the solution until a sample would no longer decolorize a carbon tetrachloride solution of bromine. The best results were obtained when the reacting materials were slightly cooled. The solution was then diluted with 300 cc. of ether, and 100 g. of zinc dust was added. After the

(9) Meisenheimer and Jung, *Ber.*, **60**, 1462 (1927).

(10) Fischer and Armstrong, *ibid.*, **34**, 2885 (1901), described two forms of acetobromoglucose; Fischer, *ibid.*, **44**, 1898 (1911), later was unable to reproduce the preparation of the α-form.

(11) "Organic Syntheses," John Wiley and Sons, Inc., New York, 1926, Vol. VIII, p. 18.

(12) Acetyl determinations gave too high results due to decomposition of the sugar residue into acids during the alkali treatment.

(13) Levene and Mori, *J. Biol. Chem.*, **83**, 809 (1929).

(14) Bergmann, Schotte and Rennert, *Ann.*, **434**, 86 (1923).

first reaction had subsided, the mixture was refluxed until it would no longer give a color with moist starch–potassium iodide paper. The zinc was now removed by filtration and the solvent evaporated under reduced pressure. The acetic acid was completely driven off by evaporating several times with absolute alcohol. The resulting product was an almost colorless sirup, which reduced Fehling's solution even in the cold. A dilute mercuric chloride solution was reduced on warming for one to two minutes, indicating the presence of a formyl group. The sirup was soluble in petrolic ether and cold water. On standing the reaction product became colored and showed no tendency to crystallize; it could not be distilled *in vacuo*.

Attempts to prepare hydrazones by means of benzylphenylhydrazine hydrochloride, phenylhydrazine and 2,3-dinitrophenylhydrazine were unsuccessful.

Similarly diazomethane, semicarbazide hydrochloride and benzyl mercaptan failed to give crystalline derivatives, although the latter had reacted with the product of ozonization.[15]

Degradation of Arabinal.—The reaction was carried out as described above for diacetylarabinal and *d*-xylal,[2] except that the treatment with zinc could be omitted. All peroxides were destroyed just as rapidly by vacuum distillation of the solvent, after the bromine test had shown no more unsaturation. Freshly prepared sirups were always almost colorless.

Such preparations were used for the subsequent reactions.

Acetone Methyl Erythroside.—Five and one-half grams of arabinal was treated with ozone in the manner described above. The resulting sirup was shaken for five hours with the following mixture: 90 cc. of dry acetone, 10 cc. of dry methyl alcohol, containing 0.2% sulfuric acid and 10 g. of anhydrous copper sulfate. Calcium hydroxide was then added and the mixture again shaken until it was no longer acid to litmus paper. After filtration the solvent was distilled *in vacuo*. The remaining sirup itself could be distilled in a vacuum of 2 mm. The residue was treated again by exactly the same process, using half the amounts. The distillates of both reactions were combined and redistilled (b. p. 45–50° (2 mm.)). The total yield was 3 g.

The product obtained would not reduce Fehling's solution until it had been hydrolyzed by acid; it gave no reduction by mercuric chloride solution. Acetone methyl erythroside was stable and could be stored for long periods of time without regaining the ability to re uce Fehling's solution.

Anal. Calcd. for $C_4H_8O_4$: C, 55.14; H, 8.11. Found: C, 55.78, 55.87; H, 8.12, 8.35. Methoxy determinations gave high results. Calcd. 17.82. Found: 19.42, 19.51.

Two different samples dissolved in chloroform showed specific rotations of +57.4 and +58.0°.

Even very dilute acid removes both methoxy and the acetone groups. A 0.1557-g. sample was dissolved and made up to 9.98 cc. with 0.005 *N* hydrochloric acid. The reaction was carried out at room temperature (24°), and its course was observed polarimetrically in a 1.1-dcm. tube.

(15) D. R. Swan and W. L. Evans, THIS JOURNAL, **57**, 200 (1935).

TABLE II

HYDROLYSIS OF ACETONE METHYL ERYTHROSIDE

Time, min.	3	15	30	1080	1800	2880
α	+1.04	1.01	1.00	0.46	0.41	0.41
$[\alpha]^{24}D$	+67.0	65.1	64.3	29.3	26.6	26.6

Action of Methyl Alcoholic Hydrogen Chloride on Erythrose Sirups.—An erythrose sirup obtained by the action of ozone on 5 g. of arabinal was dissolved in 40 cc. of dry methyl alcohol, containing 0.75% hydrochloric acid. After standing for two days at room temperature the reaction mixture gave only a faint reduction with Fehling's solution. The acid was neutralized by shaking with silver carbonate. Silver chloride and the excess of carbonate were filtered and the solvent evaporated *in vacuo*. A sirup remained which again could be vacuum distilled at a bath temperature of 120–130° (2 mm.). The distillate weighed 3 g. Two products, methyl-2-desoxypentoside and 4-formylaldehydoerythrosedimethylacetal, could be isolated from it.

Methyl-2-desoxypentoside.—Immediately at the end of he distillation crystals began to appear in the distillate. If kept in a refrigerator for several days, the sirup became filled throughout with crystals. Although no solvent could be found which would separate the solid from the oil, this was effected by placing the mixture on a clay plate. The remainder was then recrystallized from ligroin or ether. It melted at 81–82° without decomposition and solidified again on cooling. The analytical results agreed with the theoretical, calculated for a methyl-2-desoxypentoside.

Anal. Calcd. for $C_6H_{12}O_4$: C, 48.65; H, 8.17; OCH_3, 21.0. Found: C, 49.11, 48.95, 48.70; H, 8.46, 8.39, 8.33; OCH_3, 20.78.

The specific rotation in water was +218.5°.

Dimethylacetal of 4-Formylaldehydoerythrose.—Since the sirupy component could not be obtained as such, it was studied mixed with the crystals, which made up 10% of the total product. The freshly distilled mixture gave no reduction with Fehling's solution. It did give a strong reaction with mercuric chloride. A small amount was treated with barium hydroxide octahydrate in methyl alcohol.[16] The solution at once assumed a bright yellow color indicating a split of the acetal and decomposition of the aldehydo sugar. The lability of the methoxy groups revealed that they were not present in a glycosidic form since their hydrolysis took place even more readily than that of methylfuranoside derivatives. The mixture proved to be very sensitive toward acids also. A solution containing 0.1496 g. was made up to 9.98 cc. in water. One drop of concentrated hydrochloric acid was added and the reaction followed polarimetrically in a 1-dcm. tube.

TABLE III

HYDROLYSIS OF DIMETHYLACETAL OF 4-FORMYLERYTHROSE

Time, hours	0.01	0.5	2	3	4
α	+0.88	1.02	1.10	1.04	1.01
$[\alpha]^{23}D$	+53.4	62.1	66.7	63.6	61.5
Time, hours		16	40	52	70
α		0.78	0.68	0.66	0.65
$[\alpha]^{23}D$		47.4	41.5	40.5	39.8

(16) Brigl and Schinle, *Ber.*, **67**, 754 (1934).

The change in rotation shown by the pure crystalline methyl-2-desoxypentoside treated in the same manner was only very slight for the first four hours so that the quick rise and fall in rotation must have been essentially due to the dimethylacetal of 4-formylerythrose.

l-Erythrose from Acetone Methyl Erythroside.—One gram of acetone methyl erythroside was dissolved in 25 cc. of 0.1 *N* sulfuric acid. After standing for three days at room temperature 1.5 cc. of glacial acetic acid[17] was added and the sulfate removed quantitatively with the calculated amount of barium hydroxide. After filtration through charcoal, the water was removed by distillation *in vacuo*. The residue was completely soluble in absolute alcohol. For the determination of the mutarotation we dried at 78° in vacuum over phosphorus pentoxide to constant weight (sample 0.3064 g.; *V*, 9.98 cc.; *l*, 1 dcm.; *t*, 24°).

TABLE IV

MUTAROTATION OF *l*-ERYTHROSE

Time after dissolving, min.	8	15	120	720	1440	2880
α	+0.38	0.41	0.51	0.85	0.95	1.03
$[\alpha]^{24}D$	+11.5	12.3	15.2	25.2	28.2	30.5

(17) Witzemann, THIS JOURNAL, **36**, 1914 (1914).

Summary

It has been demonstrated that ozonization products of *l*-arabinal include *l*-erythrose and 4-formylaldehydoerythrose. Both substances could be characterized, the former as a monoacetone-methylerythroside, the latter as 4-formylaldehydoerythrosedimethylacetal.

Acid hydrolysis of acetone-methylerythroside resulted in a preparation of *l*-erythrose, which has an equilibrium rotation of +30.5°.

Yeast does not ferment aqueous solutions of *l*-erythrose.

The synthesis of *l*-hydroarabinal is described.

AMES, IOWA
NEW YORK CITY

RECEIVED MAY 27, 1935

[CONTRIBUTION FROM THE DEPARTMENT OF CHEMICAL ENGINEERING OF THE UNIVERSITY OF WASHINGTON]

The Mercuration of Para-Cymene

BY JOHN E. NEWSTROM AND KENNETH A. KOBE

There have been many suggested methods of converting *p*-cymene, the "spruce turpentine" by-product of the sulfite pulp industry, into more useful products. These include sulfonation,[1,2] nitration,[3,4] chlorination,[4] and bromination.[4] No work has been reported on the direct mercuration of *p*-cymene so this method of attack has been used in this work.

Mercury derivatives of *p*-cymene have been described in which the mercury is adjacent to the methyl group. These are prepared by treating 2-bromo-*p*-cymene (1-methyl-2-bromo-4-isopropylbenzene) with sodium amalgam to form 2-di-*p*-cymylmercury, from which the chloride, bromide, and iodide have been prepared.[5] Whitmore and Sobatzki[6] prepared the 2-*p*-cymylmercuric chloride from the 2-sulfinate and then prepared the 2-di-*p*-cymylmercury by treating with sodium iodide in alcoholic solution.

In the direct mercuration of *p*-cymene, two mono-mercurated derivatives are possible; the 2-*p*-cymylmercuric salts previously described and the 3-*p*-cymylmercuric salts which have not been prepared previously. A number of polymercurated compounds can be formed.

(1) Phillips, THIS JOURNAL, **46**, 686–94 (1924).
(2) LeFèvre, *J. Chem. Soc.*, 1501–2 (1934).
(3) Andrews, *Ind. Eng. Chem.*, **10**, 453–6 (1918).
(4) LeFèvre, *J. Chem. Soc.*, 977–84 (1933).
(5) Whitmore, "Organic Compounds of Mercury," Chemical Catalog Co., New York, 1921.
(6) Whitmore and Sobatzki, THIS JOURNAL, **55**, 1128–35 (1933).

Experimental

Cymene was purified by shaking commercial spruce turpentine with five small portions of concentrated sulfuric acid, washing with dilute sodium carbonate solution, then with water, and drying. On fractionation, the fraction boiling 176–176.5° was used. Inorganic chemicals used were of analytical grade.

Method of Analysis.—The method of Tabern and Shelberg[7] using fuming sulfuric acid and 30% hydrogen peroxide was used.

Method of Mercuration.—Eighty-four grams (0.26 mole) of mercuric acetate, 80 cc. of ethyl alcohol, 30 cc. of glacial acetic acid, and 175 cc. (1.12 moles) of cymene are vigorously stirred on an oil-bath for eight to ten hours, the temperature of the reaction mixture not exceeding 135°. This has been found to be the maximum allowable temperature without having excessive polymercuration occur. The acetic acid is essential at the beginning of the reaction to prevent decomposition of the mercuric acetate, and is gradually removed by esterification during the reaction.

The reaction products are steam distilled until the rate of cymene removal becomes small. A concentrated alcoholic solution of 29 g. (0.26 mole) of calcium chloride is added to

(7) Tabern and Shelberg, *Ind. Eng. Chem., Anal. Ed.*, **4**, 401 (1932).